KD1JV SKC Standalone Keyer Kit Assembly

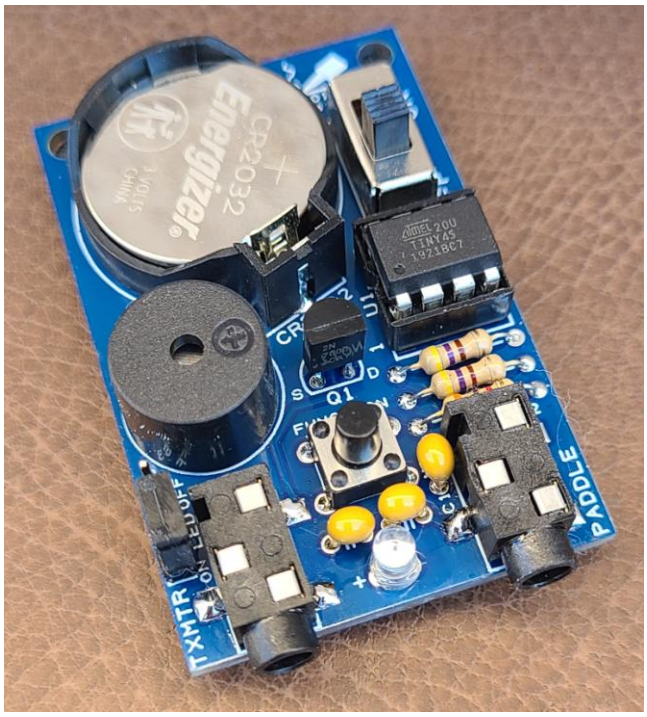

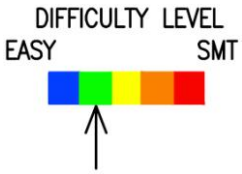

First, familiarize yourself with the parts and check for all the components. If a part is missing, please contact us and we will send one. To request a part, just send an email to grpbuilder@gmail.com.

Please read all the instructions carefully before starting.

Parts List

1 – KD1JV SKC Batt. keyer pcb
1 – U1, ATtiny45 microcontroller, 8pin DIP
1 – Q1, 2N7000 mosfet
1 – XDCR, Ø.50 audio transducer
1 – D1, Clear lens, green led, marked with a green stripe on the base, long lead is +
1 – R1, 3K resistor, (orange-black-red-gold)
2 – R2,3, 470 ohm resistor, (yellow-violet-brown-gold)
3 – C1,2,3, 100nF (.1uF) MLCC capacitor, marked 104
1 – S1, SPST pcb switch
1 – S2, tactile pcb switch
1 – S3, 1x3 Male SIP
1 – SIP shunt (Berg connector)
1 – J1,2, 3.5mm stereo jack
1 – CR2032 battery holder
1 – 8 pin dip socket
4 – self adhesive rubber foot

All the soldered components mount on the front of the board. Use the placement guide below.

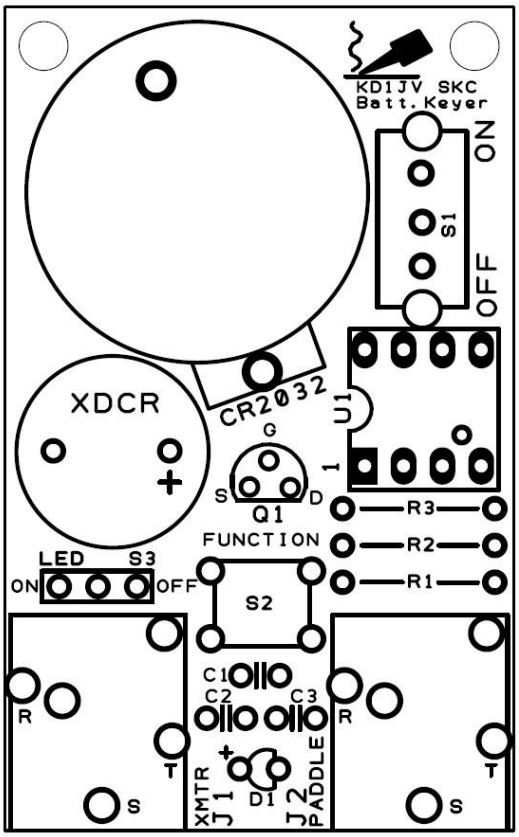

Parts placement graphic

[ ] Install C1,2,3, 100nF (.1uF) capacitor, marked 104

[ ] Install R1, 3K resistor, (orange-black-red-gold)

[ ] Install R2,3, 470 ohm resistor, (yellow-violet-brown-gold)

[ ] Install D1, clear lens green led, marked with a green stripe on the base. *Observe polarity marked on the board.* ***Long lead is "+".***

[ ] Install 8 pin dip socket

[ ] Install Q1, 2N7000 mosfet, observe the outline shown on the board

[ ] Install S1, SPST pcb switch where indicated.

[ ] Install S2, tactile pcb switch where indicated.

[ ] Install S3, 1x3 Male SIP where indicated. Plug in the shunt for LED "ON" or "OFF".

[ ] Install J1,2, 3.5mm audio jacks where indicated.

[ ] Install the battery holder.

[ ] Install the XDCR, audio transducer. *Match the polarity marked on the component with the board.*

[ ] Install the ATtiny45 IC. Be sure of pin 1 orientation, the pad is rectangular.

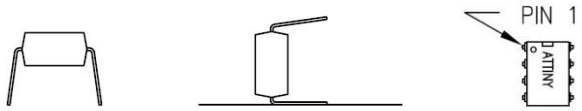

When inserting IC's, the pins are flared so that they can be retained by auto insertion tools. Gently rock them on a flat surface so the pins are parallel and they will insert into the socket more easily. Be sure of pin 1 orientation.

[ ] Install the self adhesive feet where indicated on the back side.

[ ] Install a fresh CR2032 coin cell.

This completes the assembly

Usage and Programming

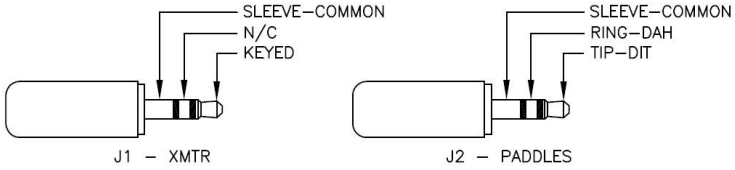

The J1 jack to the transmitter has the tip as the key, and the sleeve is ground.

By default, the J2 paddle input jack tip is "DIT", the ring is "DAH", and the sleeve is common (ground). It can be reversed with the "reverse paddle sensing" function.

- 5 to 30 wpm in 1 wpm steps
- Tune mode
- Two 64 character messages memories with Beacon mode
- Reverse paddle sense setting
- Local side tone can be turned off
- Straight key mode

The features are selected with a timed push button. Either a short push or hold closed the push button until the desired function is annunciated by the side tone and release. A 1, 2, 3, 4, 5 second push.

Short push: Send message or set code speed.

If a message has been stored, tap the appropriate paddle to start sending within 1 second.

Speed Setting:

Tap the Function button. Within 1 second "S" will be enunciated.

Within 5 seconds, use the left and right paddle to change the code speed. *Left paddle-down speed*, *Right paddle-up speed*. A beep will sound at that code speed.

This mode automatically exits in 5 seconds of no paddle closure. *Note: local side tone for enunciating functions is always set to 20 wpm, regardless of current keyer speed setting.*

Tune Mode:

Hold the Function button for 2 seconds. “T” will be enunciated.

Tap the left paddle to toggle the transmitter on. Tap the right paddle to toggle the transmitter off. Exit by pushing the function switch.

Message memory:

Hold the Function button for 3 seconds. “M” will be enunciated, followed by “EM”

- Key in your message. Use proper letter and word spacing. Pause slightly longer than you normally would to ensure a word space is inserted.
- Push the Function switch to review the message. If it comes out all garbled, you not leaving enough space between letter groups or for word spacing.
- Push the Function switch again to re-enter the message is it was garbled.
- Or, tap the Left paddle to store the message in location 1 or Right paddle for location 2.
- “MS” will be enunciated to indicated completion.

Sending a message:

- Tap the function switch, then within 1 second
  - Tap the DIT (M1) paddle
  - Tap the DAH (M2) paddle.
- The message can be paused by using the DAH paddle.

The message is terminated by using the DIT paddle.

Side tone:

Hold the Function button for 4 seconds. “ST” will be enunciated.

When the switch is released “ON or “OF” will be enunciated indicating if the local side tone is on or off.

Reverse paddle setting:

Hold the Function button for 5 seconds. “RP” will be enunciated.

This reverses the paddle sense from left dot to right dot. Once set, it can only be cleared by resetting the chip (ground pin 1) or disconnecting the battery.

Beacon mode:

Message 1 can be set to repeat. The pause between repeats is set to 1 seconds and is fixed.

- To set Beacon mode, press the function switch while message 1 is active. The switch is detected between letters, so hold the switch until “B” is heard on the transducer.
- The message can be paused by using the DASH paddle.

The message is terminated by using the DIT paddle.

Straight Key mode:

Grounding the DASH input on power up will put the SKC into straight key mode. This is most easily done by inserting a mono plug into the paddle jack. In this mode, the Tx keying output and side tone will follow the input to the DOT pin. The Function switch is disabled in this mode, as the paddle is needed to control the functions it enables.

Schematic

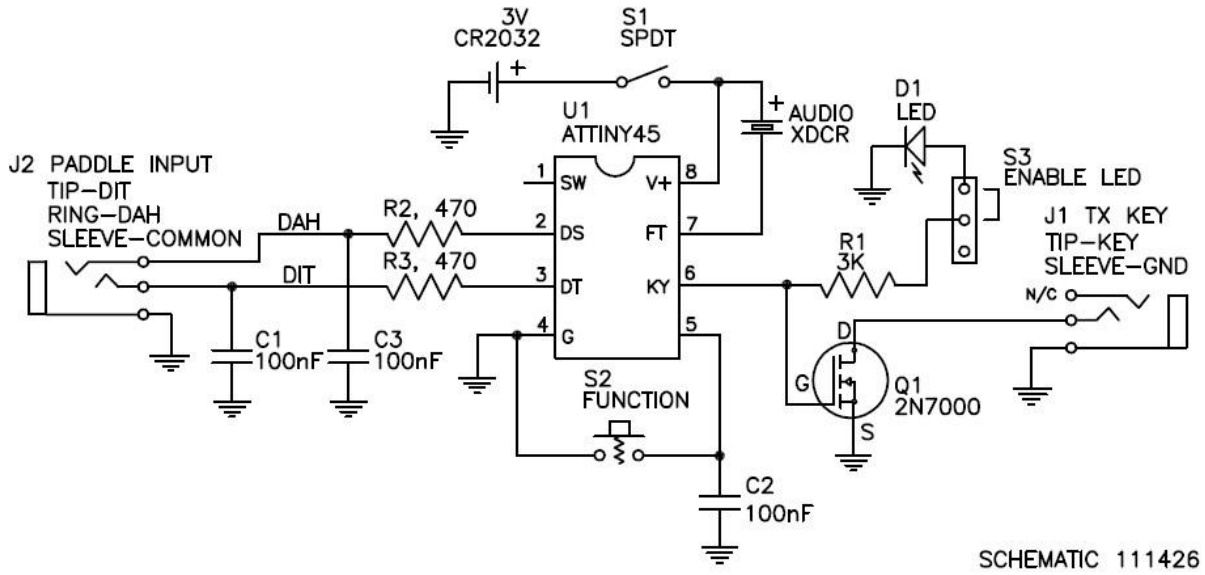

General design notes:

The keyer has an ultra low power requirement, using ~800*u*A active mode, with <10*u*A in standby. Tx keying output from chip is active high. The 2N7000 mosfet is supplied to invert the signal as most rigs key and mute with active low signal. It also allows for switching voltages greater than the 3 volts the SKC needs for operation.

You can leave S1 on continuously, as the current draw for the circuit is extremely low. If you turn off S1, it will prevent any battery drain from the function switch being accidentally pressed during storage or rolling around in your go bag.

The LED will give visual indication of the CW being sent or can be heard on the transducer if your rig does not have side tone. With no jumper on the led and disabling the external side tone function will result in the least draw on the battery. With the power switch left on, all programming is retained, but for increased battery life turn the power switch off.

The LED will only flash for code. It will not flash for the function enunciations. All function enunciations will be audio through the transducer, and is always set to 20 wpm, regardless of current keyer speed setting.

C1, 2 and 3 are required for static protection and help de-bounce the switch and paddle inputs.

Notes: