# QRPBuilder VK2AN ELF Pre-amp

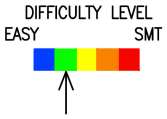


Preliminary

## Parts List

*1 – QRPBuilder VK2AN ELF Preamp pcb
*1 – U2, LMP7721 OpAmp
1 – U2, 78L05 voltage regulator
1 – D1, green LED, clear lens
2 – R1,2, 3.9M resistor (orange-white-green-gold)
4 – R3,4,6,7, 1M resistor (brown-black-green-gold)
*1 – R5, 1G resistor (brown-black-black-gray-gold)
1 – R8, 22 ohm resistor (red-red-black-gold)
1 – R9, 10 ohm resistor (brown-black-black-gold)
1 – R10, 47K resistor (yellow-violet-orange-gold)
3 – C1,2,3, .001uF MLCC marked 102
5 – C4,6,7,9,10, .1uF MLCC marked 104
1 – C5, 10uF electrolytic capacitor
1 – C8, 470 uF electrolytic capacitor
1 – C11, 1000uF electrolytic capacitor
*1 – NE-2 neon bulb
1 – T1, 600:600 ohm audio transformer, eBay, look for EI14 600:600 audio transformer, ~$.50
1 – J2, RJ45 female pcb jack
2 – S1,2, 1x3 SIP, Berg connector (jumper)
1 – J3, 1x5 SIP
1 – 9V battery clip-female, Mouser #534-594
1 – 9V battery clip-male, Mouser #534-593
2 – 8-32 S.S. captive hardware
4 – Self-adhesive rubber foot

*** – supplied with the partial kit**

Using the component placement graphic guide below, start assembling and check off as you go.

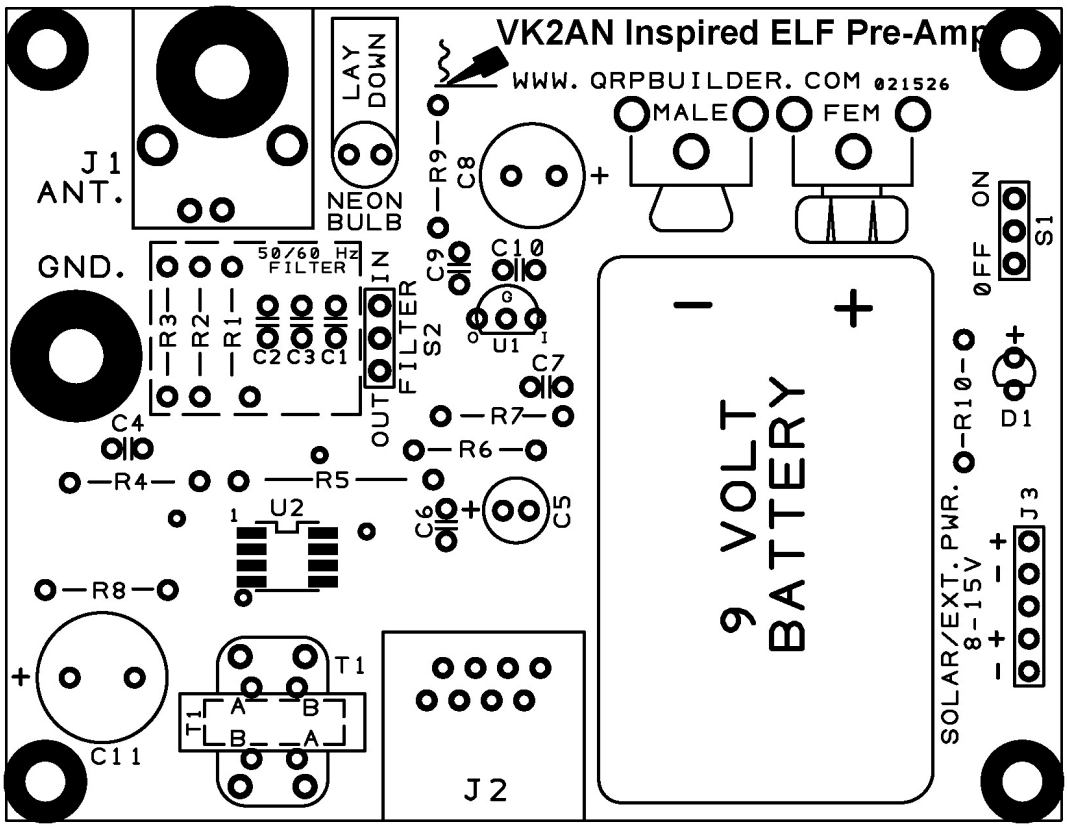


[ ] Install U2, LMP7721 SOIC OpAmp, *match the board outline for pin1*

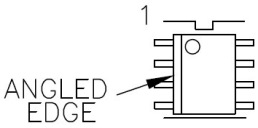


[ ] Install R1,2, 3.9M resistor (orange-white-green-gold)

[ ] Install R3,4,6,7, 1M resistor (brown-black-green-gold)

[ ] Install R5, 1G resistor (brown-black-black-white-gold)

[ ] Install R8, 22 ohm resistor (red-red-black-gold)

[ ] Install R9, 10 ohm resistor (brown-black-black-gold)

[ ] Install R10, 47K resistor (yellow-violet-orange-gold)

[ ] Install C1,2,3, .001uF MLCC marked 102

[ ] Install C4,6,7,9,10, .1uF MLCC marked 104

[ ] Install D1, green LED, clear lens, *observe polarity, the long lead is "+"*

[ ] Install U1, 78L05 voltage regulator, *match the board outline*

Preliminary

[ ] Install C5, 10uF electrolytic capacitor, *long lead is "+"*

[ ] Install C8, 470 uF electrolytic capacitor, *long lead is "+"*

[ ] Install C11, 1000uF electrolytic capacitor, *long lead is "+"*

[ ] Install NE-2 neon bulb, lay down

[ ] Install S1,2, 1x3 SIP, and Berg connector (jumper)

[ ] Install J3, 1x5 SIP

[ ] Install J2, RJ45 female pcb jack

[ ] Install 9V battery clips, as shown below. *Do not mix them up.*

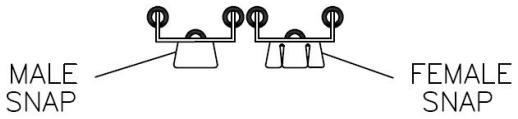


[ ] Install T1, 600:600 ohm isolation transformer

[ ] Install J1, BNC female right angle pcb connector or 8-32 hardware, same as ground connection.

[ ] Install the 8-32 SS ground wingnut assembly at the ground connection position as shown in the graphic below.

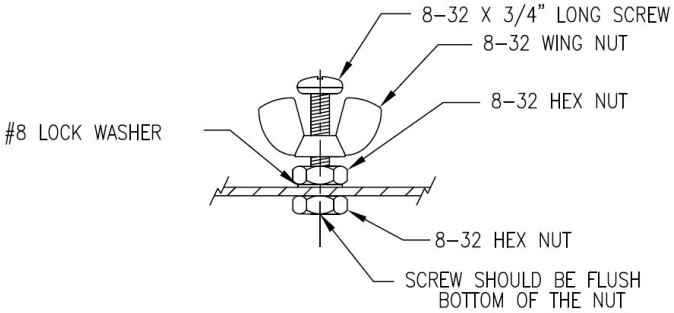


[ ] Attach the four rubber feet where indicated on the backside silkscreen or mount in your enclosure.

This completes the assembly

Preliminary

**Schematic:**

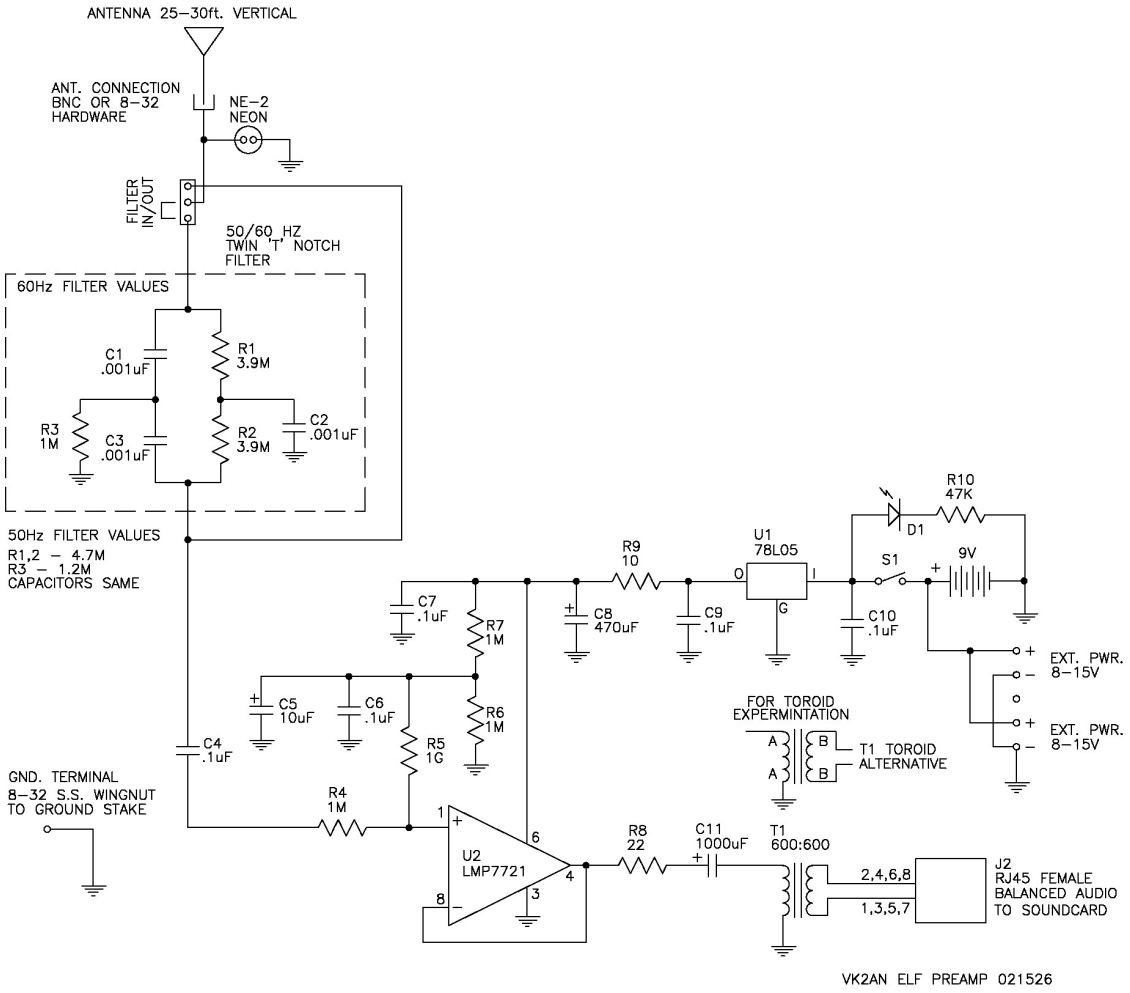


## 50Hz domestic power considerations

For users that have 50Hz domestic power, the twin “T” notch filter can be optimized for that frequency by changing R8,9 to 4.7M ohm and R7 to 1.2M ohm. Capacitors C7,8 remain the same.

Installation and usage considerations.

The preamp can be used portable, with the 9v battery on the board or in permanent remote installation with a rechargeable battery and solar charger

Choose an antenna location carefully, as far away from domestic power lines or any other domestic powered devices as possible. The antenna can be a fiberglass squid pole with a 20-30ft. wire or a wire supported by the top of a tree. Keep the base away from the trunk as it will absorb the type of signals you are trying to receive.

For a permanent setup, mount the pre-amp in a waterproof box at the antenna base pipe. Use a ground stake at the antenna base and ground the board.

There are provisions to power the board with the external power pads on the pcb with a detached battery and charged with a solar panel. The current draw is very low, <5mA. Size your batteries and solar panel so a charge controller is not necessary. Avoid a charge controller, as they can generate interference. Or, you could use a small panel with one of the 9V LiPo batteries with LM78L09 regulator.

The audio output is via the RJ45 connector for the balanced audio output to your soundcard. The pcb has the RJ45 lines (2,4,6,8) tied together for one side, and the white striped lines (1,3,5,7) are tied together for the other side for the balanced audio output. The cat5 multiple line paring, allows for longer runs of the cable (100m or more), preferably underground.

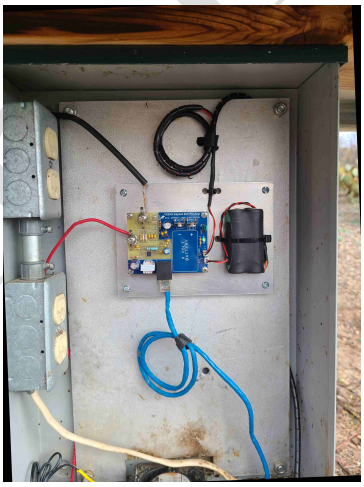

The antenna is a 20ft. long vertical. The board powered with a couple of 18650 LiPo batteries in series, charged with the solar panel. The cat5 run to the shack is about 200ft, run underground.

Further observations:

02/16/26 - For Schumann Resonances it was necessary for me to switch off the 60/50Hz filter. Peter also told me the inexpensive EI14 600:600 audio transformer on eBay checked with the 3dB point @10Hz and should be useable down 3 or 4 Hz. This capture reflects that transformer.

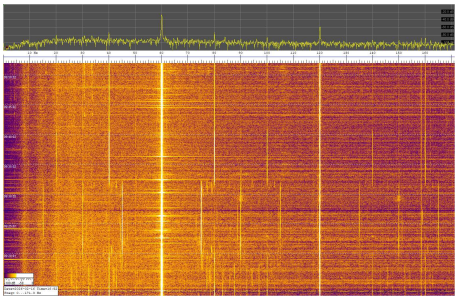

Preliminary

Notes:

Preliminary