NorCal QRP Club

Navigation
- Home
- About NorCal
- Contact Us
- Jim Cates Tribute
- Retired Kits
- NorCal Manuals
- Members Projects

Print Friendly Version

The NB6M Miniboots

By Wayne McFee NB6M

Requests for an “outboard” version of the RF power amplifier used in the 5 Watt Mod for the SMK-1 led me to further research and experimentation which resulted in the amplifier circuit described in my article “A Mosfet QRP Gallon”, published in the Fall, 2000 issue of QRPp, the journal of the NorCal QRP Club. The RF amplifier described utilized the cheap, readily available IRF510 Mosfet to produce 5 Watts of output with an input of from 1 to 1.5 Watts and was switched into and out of the antenna line from the QRP rig by a DPDT toggle switch.

Since that article was published, I have added several improvements to that basic RF Amplifier circuit. I call the new amplifier the “NB6M Miniboots”. For those who are comfortable with building “Ugly Style” from a simple circuit, this project is a snap and the parts are all readily available. For those who would like the parts already gathered and the layout prepared for them, a kit is in the offing.

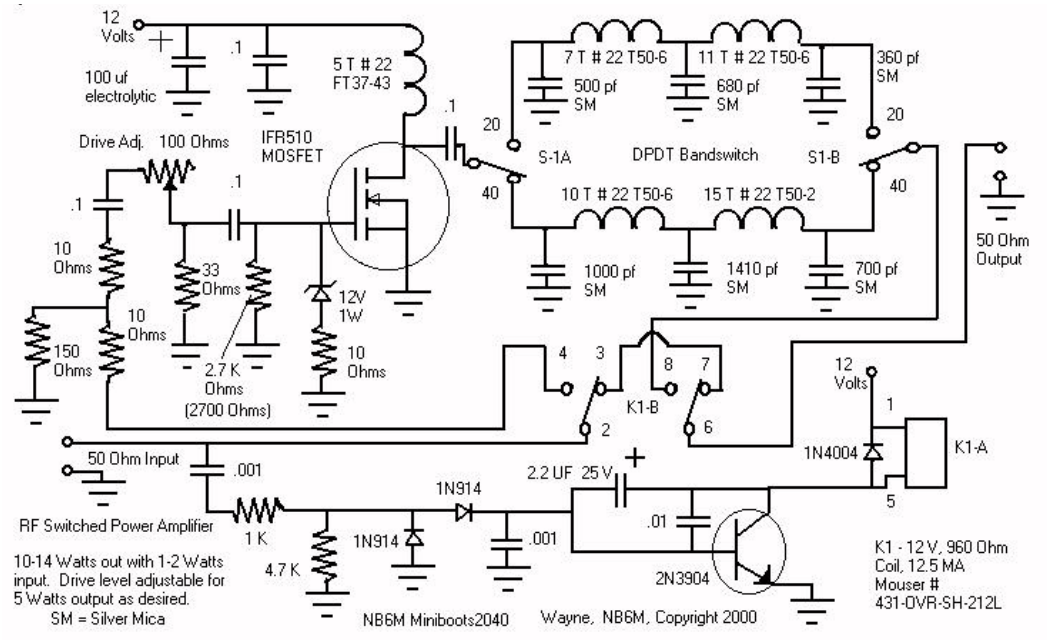

40/20 Meter version shown, with attenuator input for 1 to 2 Watts drive

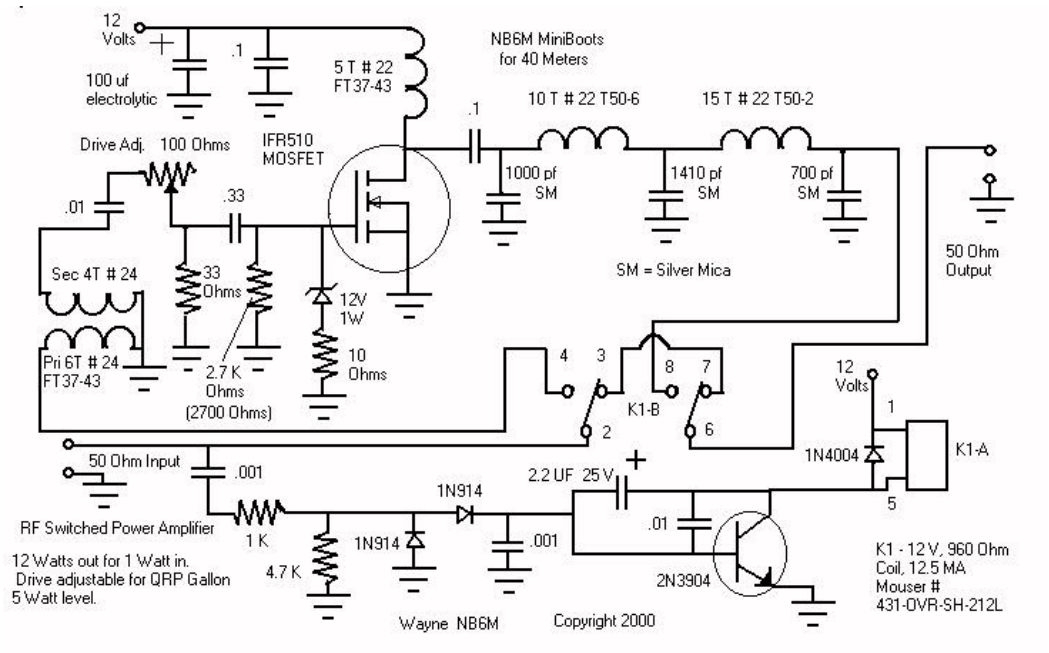

40 Meter version shown, with transformer input for 3/4 to 1 Watt drive

This RF Power Amplifier operates from a 12 Volt supply, can be set up to accept an input of from about l' Watt to 2 Watts, and can deliver from 10 to 14 Watts of output into a 50 Ohm load. Tests thus far have been very satisfactory on the 80 through 20 Meter ham bands, with output typically 14 Watts or more on 80 and 40, a bit lower on 30, and around 10 Watts on 20. Initial tests on the higher frequency bands indicate that some circuit changes may be necessary in order to provide for operation of the “Miniboots” on 17 through 10 Meters. Further tests are in progress.

Just as Rick Campbell, KK7B, called his small, high performance CW transceiver the GQRP Rig, or Generic QRP Rig because it incorporated ideas from previous generations of homebrew artists, this amplifier circuit could be called the GPA, or Generic Power Amplifier because it makes use of ideas from contributors like Michael Masterson, KA2HZA, Mike Kossor, WA2EBY, and from such all-time greats as Wes Hayward, W7ZOI, Roy Lewallen, W7EL, and Doug DeMaw, W1FB.

The additions to the basic QRP Gallon circuit include an RF-sensing relay driver circuit to switch the amp into and out of the antenna line automatically, output network filter values to allow for up to fourteen Watts of output with a two watt input, and a drive level adjustment potentiometer which allows for setting the amplifier at exactly the 5 Watt “QRP Gallon” level as desired.

Mike Gipe, K1MG, performed spectrum analysis tests on a 40 Meter version of the “Miniboots”, which showed the output of the amplifier to be quite clean at all levels of drive and output.

On-the-air tests of the “Miniboots”, involving many QSOs on the 40 and 20 Meter ham bands, using an SW-40 and an SW-20+ as the driving QRP rigs, have resulted in signal reports such as “nice sounding rig”, “very clean sounding rig”, and “your rig sounds great”. Monitored on another receiver, the output CW note is pure, and the keying very clean.

For a driving power level of from one to two watts, the amplifier utilizes a resistive 3db attenuator at the input, in order both to provide a 50 Ohm load for the driving rig and to prevent over-driving the amp. If the driving QRP rig has an output of three-quarters to one watt, a broadband transformer input is used which provides close to a 50 Ohm load to the driving QRP rig without attenuation.

A simple DPDT toggle switch allows for two-band operation. A multiple-position rotary switch could be used to select output networks for multiple-band operation, if desired. The addition of an RF-sensing relay driver circuit provides for hands-free T/R switching. The timing of the relay driver circuit is such that there is full QSK for the slower CW speeds and semi-QSK for the medium to fast CW speeds. The relay used pulls in quickly enough that, even at the faster CW speeds, a single “dit” is not clipped short. Although the relay specified in the circuit diagrams is Mouser part # 431-OVR-SH-212L, a 12 Volt, DPDT relay with a 900 Ohm coil, a Radio Shack 12 Volt DPDT relay with a 200 Ohm coil, Radio Shack part # 275-249A, has been used very successfully in this circuit.

Thus far, several versions of the Miniboots have been built and tested, by the author and by Richard Fisher, KI6SN, with similar, positive results. All versions have been built “Ugly” style, as there are a relatively small number of parts in the amplifier circuit, and, building the amplifier over a solid ground plane, with short leads, improves stability and helps prevent spurious output. Thus far, there has been no indication of instability in any of the prototypes built.

None of the versions of the “Miniboots” built thus far have been laid out exactly the same, due to the “ugly” method of construction. However, that means that the individual builder can plan the layout so as to utilize any of a variety of enclosures. One possible layout is suggested in the attached drawing.

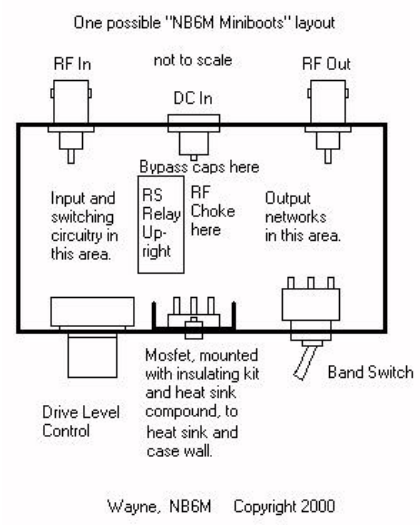

A parts list and two circuits diagrams are provided, one with the resistive attenuator input to accept one to two Watts of drive, and another with the broadband transformer input to accept a drive level of three-quarter to one Watt.

If the broadband transformer input is used, insert a QRP SWR meter in the line between the driving rig and the amplifier and check the reflected power back to the rig. My antenna analyzer shows the amplifier with the transformer input to have an SWR of 1.3 to 1 or less from 1.8 Mhz up through 10 Mhz. At 14 Mhz, the SWR is 1.7 to 1. The number of turns on the primary of the broadband transformer can be adjusted as necessary in order to provide a better match.

The IRF510 will require heat sinking, and the Drain of the Mosfet must be insulated from ground. It is a good idea to use an Ohm-Meter to check for shorts from the Drain to ground before supplying DC power to the amplifier. The Miniboots could easily be built into an Altoids tin, if desired, making for a very small package.

The drive level adjustment pot can be either a trimpot, with a screwdriver access hole cut in the enclosure used, or can be a front panel mounted control with a knob. The choice is yours. Whichever style pot is used, the input circuit should be laid out so that short leads are used to connect the pot to the gate circuitry of the Mosfet. Also, if considerable operation is planned at Milliwatt levels, the pot should have a high enough wattage rating to be able to absorb its share of the RF input to the amplifier.

Two component value charts are provided for the output filter network.

Table 1 has component values for ten to fourteen Watts of output.

NB6M Miniboots

	C-1	L-1	C-2	L-2	C-3
80 Meters	2000 pf	15 T # 22 T50-6	2700 pf	22 T # 22 T50-2	1462 pf
40 Meters	1000 pf	10 T # 22 T50-6	1462 pf	15 T # 22 T50-2	720 pf
30 Meters	680 pf	8 T # 22 T50-6	1000 pf	13 T # 22 T50-6	470 pf
20 Meters	500 pf	7 T # 22 T50-6	680 pf	11 T # 22 T50-6	360 pf
17 Meters	400 pf	6 T # 22 T68-6	550 pf	10 T # 22 T50-6	275 pf
15 Meters	330 pf	6 T # 22 T50-6	470 pf	8 T # 22 T68-2	240 pf
12 Meters	280 pf	5 T # 22 T50-2	400 pf	8 T # 22 T50-2	200 pf
10 Meters	250 pf	5 T # 22 T50-6	340 pf	8 T # 22 T50-6	180 pf

Table 1. 10-14 Watt output network component values

Wayne, NB6M

TABLE 1

Table 2 has component values for a nominal 5 Watt output, should the builder desire to build the amplifier for use only up to the QRP Gallon level.

NB6M Miniboots

	C-1	L-1	C-2	L-2	C-3
80 Meters	820 pf	21 T # 24 T50-2	1600 pf	25 T # 24 T50-2	910 pf
40 Meters	390 pf	16 T # 24 T37-2	820 pf	19 T # 24 T37-2	470 pf
30 Meters	270 pf	13 T # 24 T37-2	560 pf	16 T # 24 T37-2	330 pf
20 Meters	220 pf	11 T # 24 T37-2	390 pf	13 T # 24 T37-2	240 pf
17 Meters	180 pf	10 T # 24 T37-2	330 pf	14 T # 24 T37-6	180 pf
15 Meters	150 pf	9 T # 24 T37-2	270 pf	11 T # 24 T37-2	150 pf
12 Meters	135 pf	10 T # 24 T37-6	230 pf	10 T # 24 T37-2	135 pf
10 Meters	120 pf	9 T # 24 T37-6	220 pr	11 T # 24 T37-6	120 pf

Table 2. 5 Watt output network component values

Wayne, NB6M

TABLE 2

At this point, component values are provided for the 17 Meter through 10 Meter ham bands for information only, as initial tests indicate that some circuit modification may be necessary to allow for satisfactory operation on the higher frequency bands. As stated, further testing is in progress.

An automatically switched, outboard RF Power Amplifier which allows for operation at power levels from Milliwatts to several Watts is a very useful addition to the QRP ham shack. Whether you decide to build the “NB6M Miniboots” for operation only at true QRP output levels, or for optional operation at low QRO levels as well, I am sure you will be more than satisfied with the results.

Enjoy!

MiniBoots Parts List

```
.1 uf                                                   4
.01 uf                                                  1
.001 uf                                                 2
2.2 uf Electrolytic                                     1
100 uf Electrolytic                                     1
100 Ohm trimpot or panel mounted pot, as desired        1
33 Ohm, ½ Watt                                          1
2.7 Kohm, ½ Watt                                        1
10 Ohm, ½ Watt                                          1
1 KOhm, ½ Watt                                          1
4.7 KOhm, ½ Watt                                        1
12 Volt, 1 Watt Zener Diode                             1
1N914 (or 1N4148)                                       2
1N4004 Silicon Diode                                    1
2N3904 General Purpose Transistor  (2N4401, etc)        1
IRF510 Mosfet                                           1
RF Choke, FT37-43 with 5 Turns # 22                     1
12 Volt, DPDT Relay
Mouser # 431-OVR-SH-212L or Radio Shack RS275-249A   1
RF Jacks, BNC Type                                      2
Power Connector                                         1
For resistive attenuator input
10 Ohm, 1 Watt                                          2
150 Ohm, 1 Watt                                         1
For broadband transformer input
FT37-43, Primary 6 Turns # 24, Secondary 4 Turns # 24   1
If two-band operation is desired, add
DPDT Toggle Switch                                      1
```

If multiple-band operation is desired, add Rotary switch, dual contact, multiple-position as desired

For output filter component values, see Tables 1 and 2

Enclosure as desired.

Page last updated: 03/11/2019, 21:08:58
Page Maintained by: dean@alpinesoft.com
